GE PROPRIETARY INFORMATION: The information contained in this document is GE proprietary information and is disclosed in confidence. It is the property of GE and shall not be used, disclosed to others or reproduced without the express written consent of GE, including, but without limitation, it is not to be used in the creation, manufacture, development, or derivation of any repairs, modifications, spare parts, designs, or configuration changes or to obtain FAA or any other government or regulatory approval to do so. If consent is given for reproduction in whole or in part, this notice and the notice set forth on each page of this document shall appear in any such reproduction in whole or in part. This technical data is considered ITAR and/or EAR controlled pursuant to 22 CFR Part 120-130 and 15CFR Parts 730-774 respectively. Transfer of this data by any means to a Non-U.S. Person, whether in the United States or abroad, without the proper U.S. Government authorization (e.g., License, exemption, NLR, etc.), is strictly prohibited.

| 1 | 2 | 3 | 4 | FOLD | 5 | 6 | 7 | 8 |
|---|---|---|---|---|---|---|---|---|

DRG. No. EL33626B — SHT. No. 1

FILENAME = /RLM1600/3/A000013736

FOR DRAWING ISSUE SEE SHEET 1

ALTERATION SHEET ISSUE NO. SHOWN ENCIRCLED THUS:– ◯ LATEST ISSUE CANCELS ALL PREVIOUS ISSUES

| SHT ISS | DATE | INITIAL | 'A''C'or'G' FORM | DESCRIPTION | SHEET REVISED AT DRAWING ISSUE * | * | SHT ISS | DATE | INITIAL | 'A''C'or'G' FORM | DESCRIPTION | SHEET REVISED AT DRAWING ISSUE * | * |
|---|---|---|---|---|---|---|---|---|---|---|---|---|---|
| A | 23/8/93 | KB | W356 | PLANNING ISSUE | DCP4105W | | 1 | 27/8/93 | KB | A15964 | SHEET ISSUED | | ● |
| 2 | | | | | | | 3 | | | | | | |

REVISIONS

| ZONE | LTR | DESCRIPTION | DATE | APPROVED |
|---|---|---|---|---|
| | A | DESIGN ACTIVITY TRANSFERRED PER WR GE4S60466 | 04-03-11 | E. TORRES M.A. OTT |

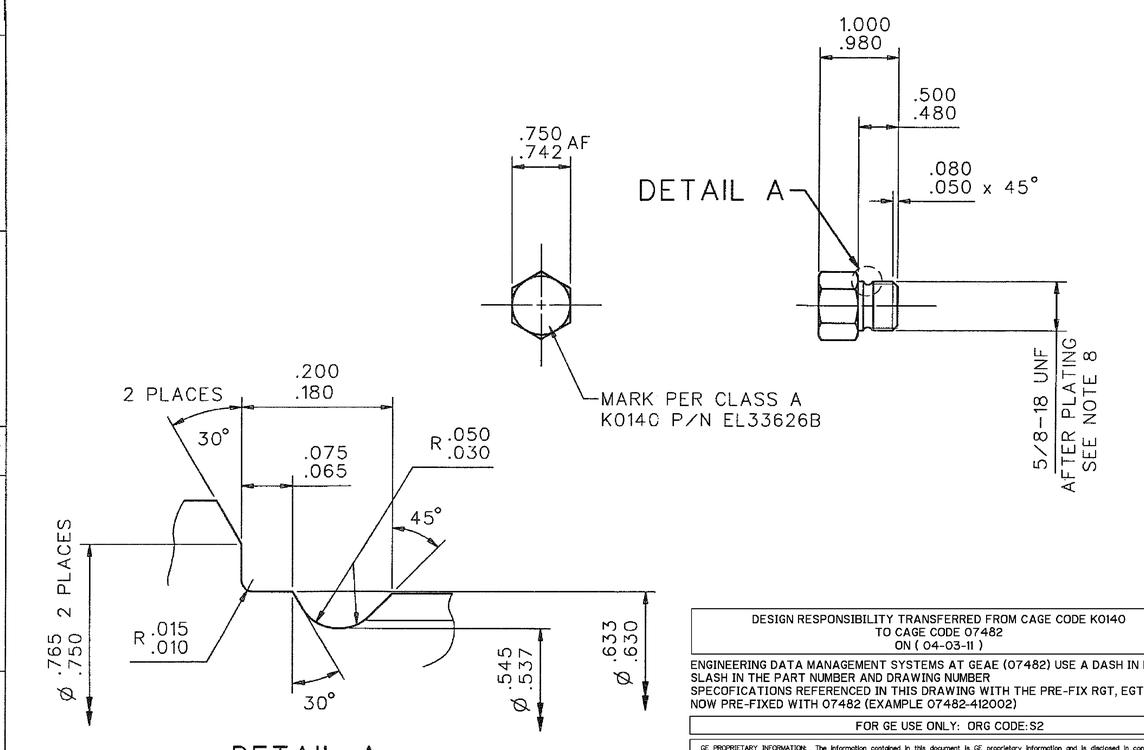


DETAIL A
SCALE 10:A

1. THIS COMPONENT IS A TRACEABLE PART IN ACCORDANCE WITH E.G.T.521101, CODE AND IDENTIFICATION NUMBERS TO BE MAINTAINED THROUGH ALL STAGES OF MANUFACTURE. NUMBERS TO BE MARKED IN ACCORDANCE WITH E.G.T.521102 (IDENT MARKING).
3. MINIMUM QUALITY STANDARD. COMPONENT MUST CONFORM TO E.G.T.950420.
6. AFTER FINAL MACHINING PART MUST MEET FLUORESCENT DYE PENETRANT INSPECTION TO E.G.T.526214 CLASS 3 SEE TABLE BELOW.
7. MACHINE ALL OVER TO 63 MICROINCHES.
8. SILVER PLATE .0002–.0006 THICKNESS ON THREAD TO AMS 2410
9. SAME AS EL33626A AT ISSUE 1 EXCEPT THREAD LENGTH AND SILVER PLATING

FLUORESCENT PENETRANT INSPECTION REQUIREMENTS

| AREA | ALLOWABLE INDICATIONS MAX LG | MIN SP | OTHER REQUIREMENTS |
|---|---|---|---|
| ALL | .062 | .250 | MAX OF 10 ALLOWED |

SPECIAL INSTRUCTIONS

1) INDICATIONS INTERPRETED AS CRACKS NOT ALLOWED
2) NO INDICATIONS ALLOWED WITHIN .250 OF HOLES
3) INDICATIONS MUST NOT BE IN FILLETS OR CROSS CORNERS
4) INDICATIONS .030 AND SMALLER ARE CONSIDERED NON INTERPRETABLE & ARE ALLOWED IN ANY AREA EXCEPT INDICATIONS MUST BE EITHER SEPARATED BY AT LEAST .250 OR SPACED SO THAT THERE ARE NO MORE THAN 5 INDICATIONS IN ANY .500 Ø CIRCLE

DESIGN RESPONSIBILITY TRANSFERRED FROM CAGE CODE K0140 TO CAGE CODE 07482 ON ( 04-03-11 )

ENGINEERING DATA MANAGEMENT SYSTEMS AT GEAE (07482) USE A DASH IN LIEU OF A SLASH IN THE PART NUMBER AND DRAWING NUMBER SPECOFICATIONS REFERENCED IN THIS DRAWING WITH THE PRE-FIX RGT, EGT OR GTT ARE NOW PRE-FIXED WITH 07482 (EXAMPLE 07482-412002)

FOR GE USE ONLY: ORG CODE:S2

GE PROPRIETARY INFORMATION: The information contained in this document is GE proprietary information and is disclosed in confidence. It is the property of GE and shall not be used, disclosed to others or reproduced without the express written consent of GE, including, but without limitation, it is not to be used in the creation, manufacture, development, or derivation of any repairs, modifications, spare parts, designs, or configuration changes or to obtain FAA or any other government or regulatory approval to do so. If consent is given for reproduction in whole or in part, this notice and the notice set forth on each page of this document shall appear in any such reproduction in whole or in part. The information contained in this document may also be controlled by the U.S. export control laws. Unauthorized export or re-export is prohibited.

| | |
|---|---|
| DRAWN | G.KNIGHT |
| CHECKED | S.WINTERTON |
| DATE | 12/8/93 |
| APPROVED: | |
| DRAUGHTING | A.C.THOMPSON |
| DESIGN | S.WINTERTON |
| ENGINEERING | K.W.R.MORE |
| PRODUCTION | – |
| QUALITY | I.MOIG |
| LAB | – |

C.A.D DRAWING
THIRD ANGLE PROJECTION
SCALE:– A
( DO NOT SCALE PRINT )

GEOMETRICAL TOLERANCES TO BS 308.
GENERAL MACHINING TOLERANCES (U.O.S.) :–
HOLES AND INTERNAL SURFACES: SIZE TO + .010"
SHAFTS AND EXTERNAL SURFACES: SIZE TO – .010"
CENTRE DISTANCES AND CENTRES TO FACES ± .005"
ANGLES: ± 0°–30'
ALL DIMENSIONS ARE IN INCHES (U.O.S.).
ALL THREADS CLASS 2 MEDIUM FIT (U.O.S.).
WELDING SYMBOLS TO E.G.T. STD 400001.
REMOVE ALL BURRS & SHARP EDGES (U.O.S.).
UNLESS OTHERWISE SPECIFIED SURFACE FINISH ACCEPTED AS CAST, FORGED, WELDED, FLAME CUT ETC.
SURFACES MARKED √ TO BE MACHINED.
MACHINING SURFACE FINISH TO BE 125 U" CLA (U.O.S)

MATERIAL :– BS970 420S29S
EST. MASS: lbs ACTUAL MASS: lbs
FOR INTERPRETATION OF CLASSIFICATION SYMBOLS USED ON THIS DOCUMENT REFER TO E.G.T. STANDARD 412002.
THE HIGHEST CLASSIFICATION USED ON THIS DOCUMENT IS:–
CHARACTERISTICS CLASSIFIED AT GRID REF | ENG'ING APPROVAL

SCALE 'A' 0 1 2 3 4 5 6 — SCALE 'B' 0 1 2 3 4 5 6 7 8 9 10 11 12

EUROPEAN GAS TURBINES
GEC ALSTHOM

TITLE :–
BOROSCOPE SCREW

DRG. No. EL33626B — SHT. No. 1

A2