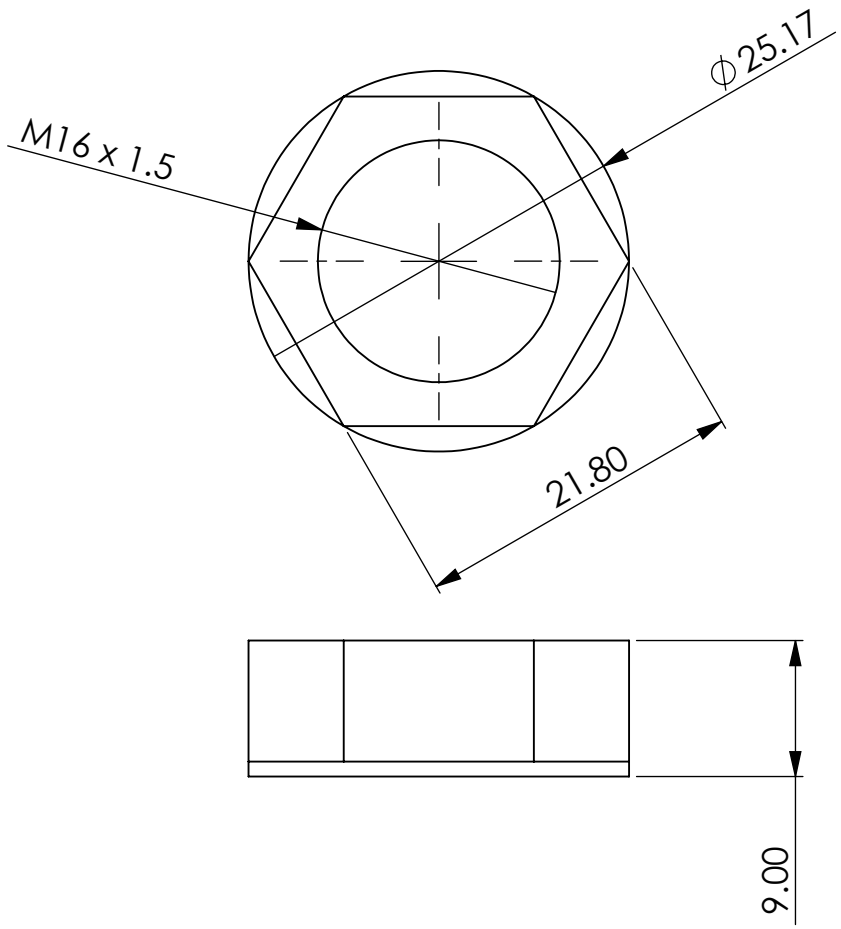

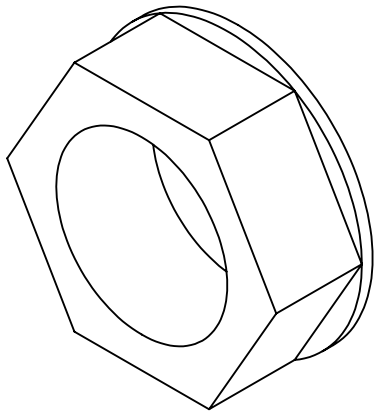

Note:4
Plastic nut with M16 x 1.5 thread

UNLESS OTHERWISE SPECIFIED:		NAME	DATE
DIMENSIONS ARE IN METRIC	DRAWN	P.P.	18-06-21
ANGULAR: ±	CHECKED		
ONE DECIMAL PLACE ±	ENG APPR.		
TWO DECIMAL PLACE ±	MFG APPR.		
INTERPRET GEOMETRIC TOLERANCING PER:	Q.A.		
MATERIAL plastic			
FINISH			
DO NOT SCALE DRAWING			

Profile Developments

TITLE:
Part 49 for
plant pot valve

SIZE	DWG. NO.	REV
A	PDP-PLANT_PART_49-00	00

SCALE: 2:1 | WEIGHT: | SHEET 1 OF 1

PROPRIETARY AND CONFIDENTIAL
THE INFORMATION CONTAINED IN THIS DRAWING IS THE SOLE PROPERTY OF PROFILE DEVELOPMENTS. ANY REPRODUCTION IN PART OR AS A WHOLE WITHOUT THE WRITTEN PERMISSION OF PROFILE DEVELOPMENTS IS PROHIBITED.

Profile Developments (Est. 1984)

5 4 3 2 1