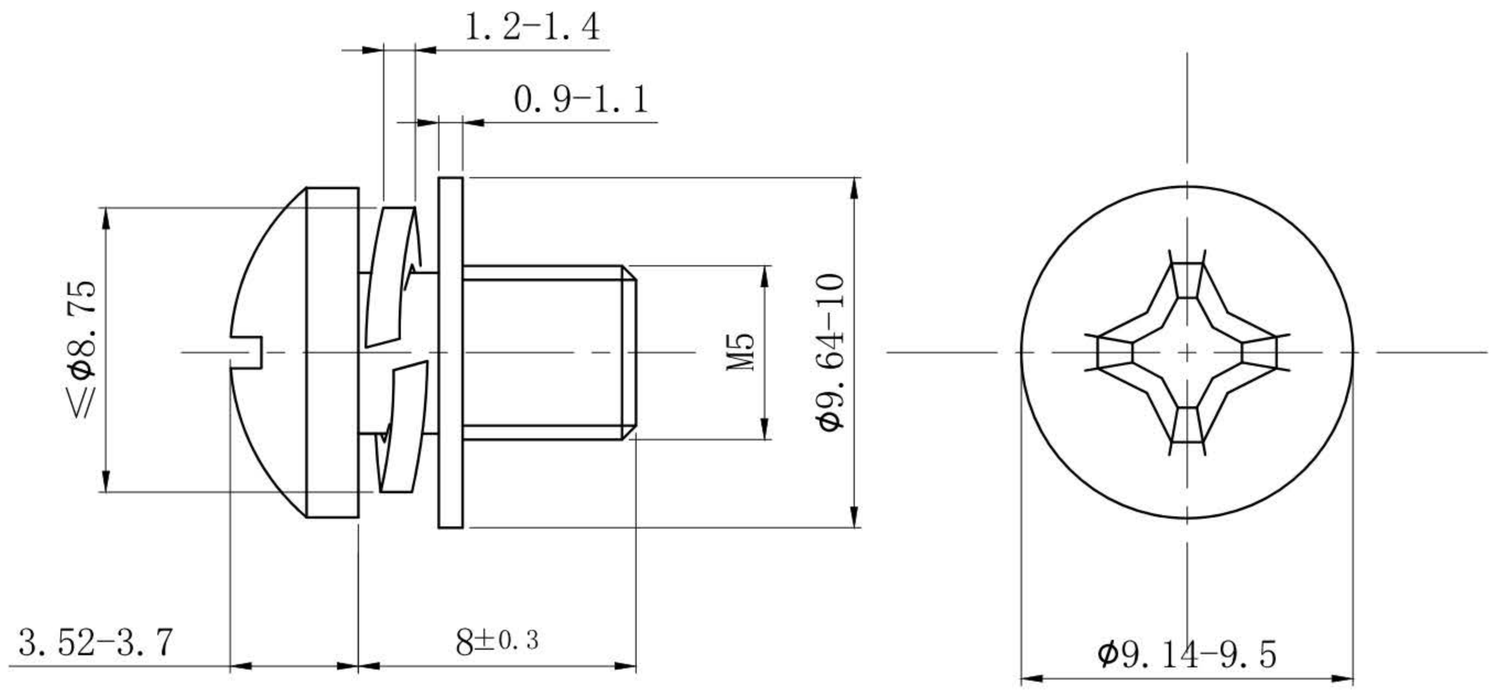

		Material: SUS304						CROSS RECESSED PAN HEAD SCREW, SINGLE COIL SPRING LOCK WASHER AND PLAIN WASHER ASSEMBLIES M5*8
								100030002