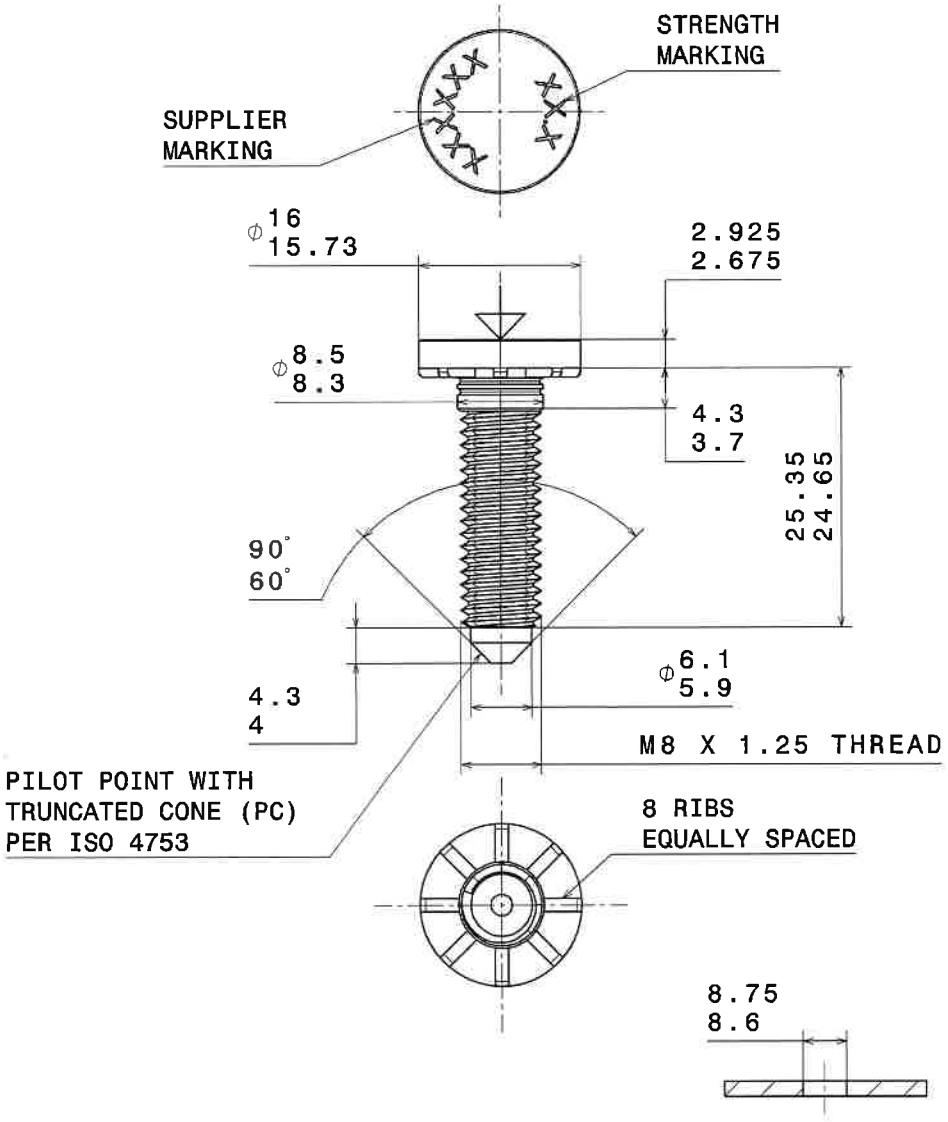

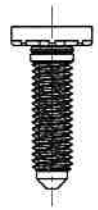

1:1

TORSION OF FRACTURE: 40Nm min

PRESS-OUT EFFORT: 2500N min

RECOMMENDED HOLE SIZE FOR SHEET METAL THICKNESS ABOVE 2mm

Coating thickness measuring point
Schichtdickenmesspunkt

Confidential

Version	Section	Revision record
	--	Drawing revised completely
AB	--	Release for realization

Size of fit	upper level	lower level

Allowable deviations on untoleranced dim. DIN ISO 4759-1

Angle [deg.]
Stamped dimension
Forged dimension
Cast dimension

Edge finish ISO 13715 -0.5 +0.5

Surface to ISO 21920-1

AIAG - CQI-9 assessment once a year

All dimension apply to finished part after surface treatment.

"Special Characteristics" acc. to ESN R-01300

F/ Function Relevant/
N/ Minor Characteristic/
S/ Safety Relevant /
Z/ Approval Relevant /
CC

Release for type test required: no

Projection: ISO 128-3 Scale 2:1

English language is the original and the reference in case of dispute.
Any other language is only for information and was not checked prior to release of the drawing.

Version	AB	Remark:
Document change notice	97337	
Designed	Checked	According to Standard
2024-04-23		
GRABOWSKIM		

Edscha Automotive Michigan Inc.

Material S/10.9 ISO 898-1/ — GPS acc. to ISO 8015

Dimension standard — Refer to protection notice ISO 16016

Surface treatment PS.50036 C8 — Title block according ESN R-50710

Heat treatment — Catia V5 Modify only via CAD

Title: PRESS STUD

Weight, app.: 13.5g

Drawing number mirror image: [without drawing]

Status	Drawing number	DocType	DocPart	DocVersion	Format
IW	M01562900	/5ED/	001/	AB	3

0000001110057

Grabowski . Michael 29.04.2024 21:09:16